PRODUCT SHEET

Description:
Shower Hinge "CPH", 90DG, Alu-Look, Glass/Glass,6-10mm Glass Thickness, W/Angle Adjustment Function & 25DG Return, Function, Brass Material, Chamfered Edges

Item number:
15.23.823-0

Units	Box	Carton	HS Code	Barcode
Pcs.	1	20	8302100090	5704866059961

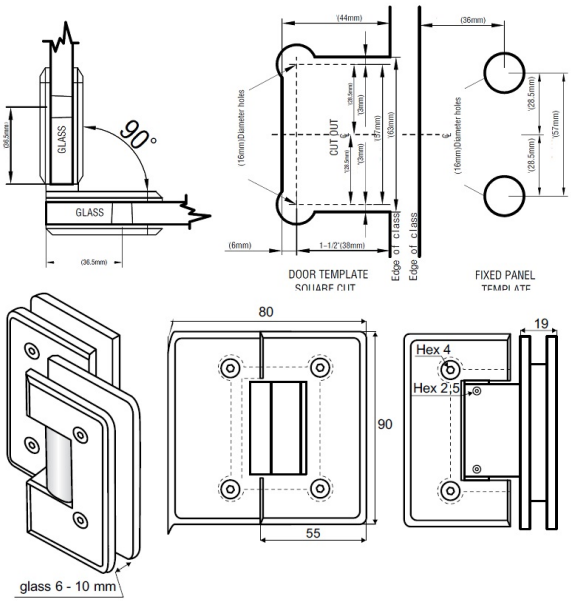

SISO A/S
Mileparken 11
DK-2740 Skovlunde
Denmark
VAT: DK 24786013

Phone +45 45 830 900

www.siso.dk
siso@siso.dk

Danske Bank
Nytorv Branch
Copenhagen
SWIFT: DABADKKK

Account no.
4180 3112 112936
IBAN Account
DK7230003112112936